# WEIGHT BENCH

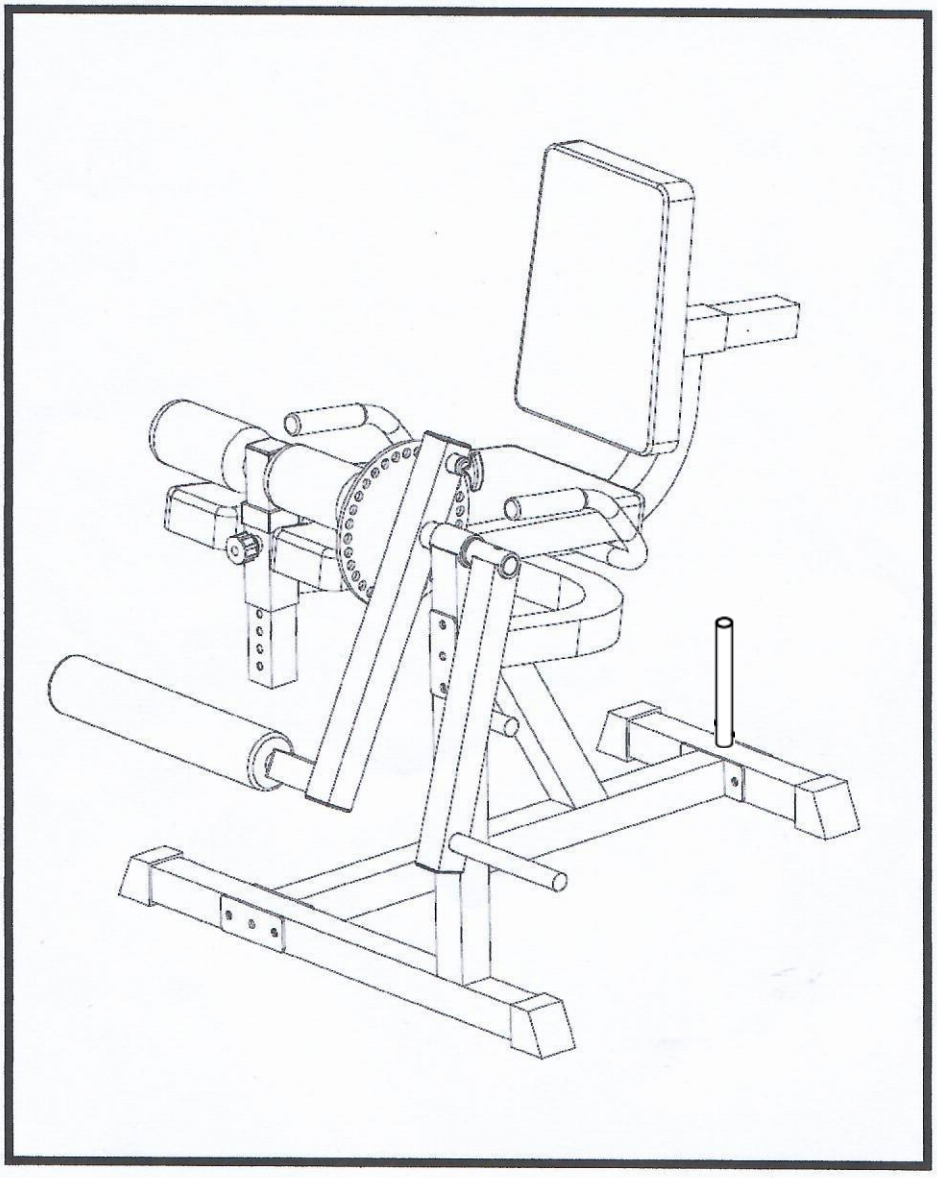

**Assembly Instruction**

# Important Safety Information

**Please keep this manual in a safe place for reference.**

1. It is important to read this entire manual before assembling and using the equipment.Safe and efficient use can only be achieved if the equipment is assembled, maintained and used properly. It is your responsibility to ensure that all users of the equipment are informed of all warnings and precautions.

2. Before starting any exercise program you should consult your doctor to determine if you have any physical or health conditions that could create a risk to your health and safety, or prevent you from using the equipment properly. Your doctor's advice is essential if you are taking medication that affects your heart rate, blood pressure or cholesterol level.

3. Be aware of your body's signals. Incorrect or excessive exercise can damage your health. Stop exercising if you experience any of the following symptoms: Pain, tightness in your chest, irregular heartbeat, extreme shortness of breath, feeling light headed, dizzy or nauseous. If you do experience any of these conditions you should consult your doctor before continuing with your exercise program.

4. Keep children and pets away from the equipment. The equipment is designed for adult use only.

5. Use the equipment on a solid, flat level surface with a protective cover for your floor or carpet. For safety, the equipment should have at least 0.5 meter of free space all around it.

6. Before using the equipment, check the nuts and bolts are securely tightened.

7. The safety level of the equipment can only be maintained if it is regularly examined for damage and/or wear and tear.

8. Always use the equipment as indicated. If you find any defective components whilst assembling or checking the equipment, or if you hear any unusual noise coming from the equipment during use, stop. Do not use the equipment until the problem has been rectified.

9. Wear suitable clothing whilst using the equipment. Avoid wearing loose clothing which may get caught in the equipment or that may restrict or prevent movement.

10. The equipment isSuitable for domestic, home use only.

11. The equipment is not suitable for therapeutic use.

12. Care must be taken when lifting or moving the equipment so as not to injure your back. Always use proper lifting techniques and/or use assistance.

Before starting any exercise or conditioning program you should consult with your personal physician to see if you require a complete physical exam.This is especially important if you are over the age of 35, have never exercised before, are pregnant, or suffer from any illness.

**CAUTION**

Read all warning affixed to the product.
Read precautions and instructions in this manual before using this equipment.
Keep this manual for future reference.

# Safety Instruction




15 seconds for each




20 seconds

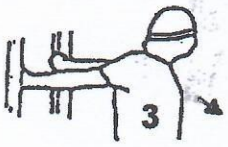


20 seconds




25 seconds




20 seconds




20 seconds




30 seconds




25 seconds for each leg

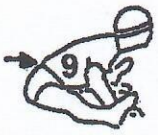


30 seconds




20 seconds




5 seconds x 3 times




20 seconds




20 seconds for each leg




5 times

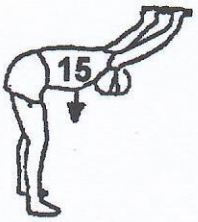


15 seconds

# Exploded Drawing

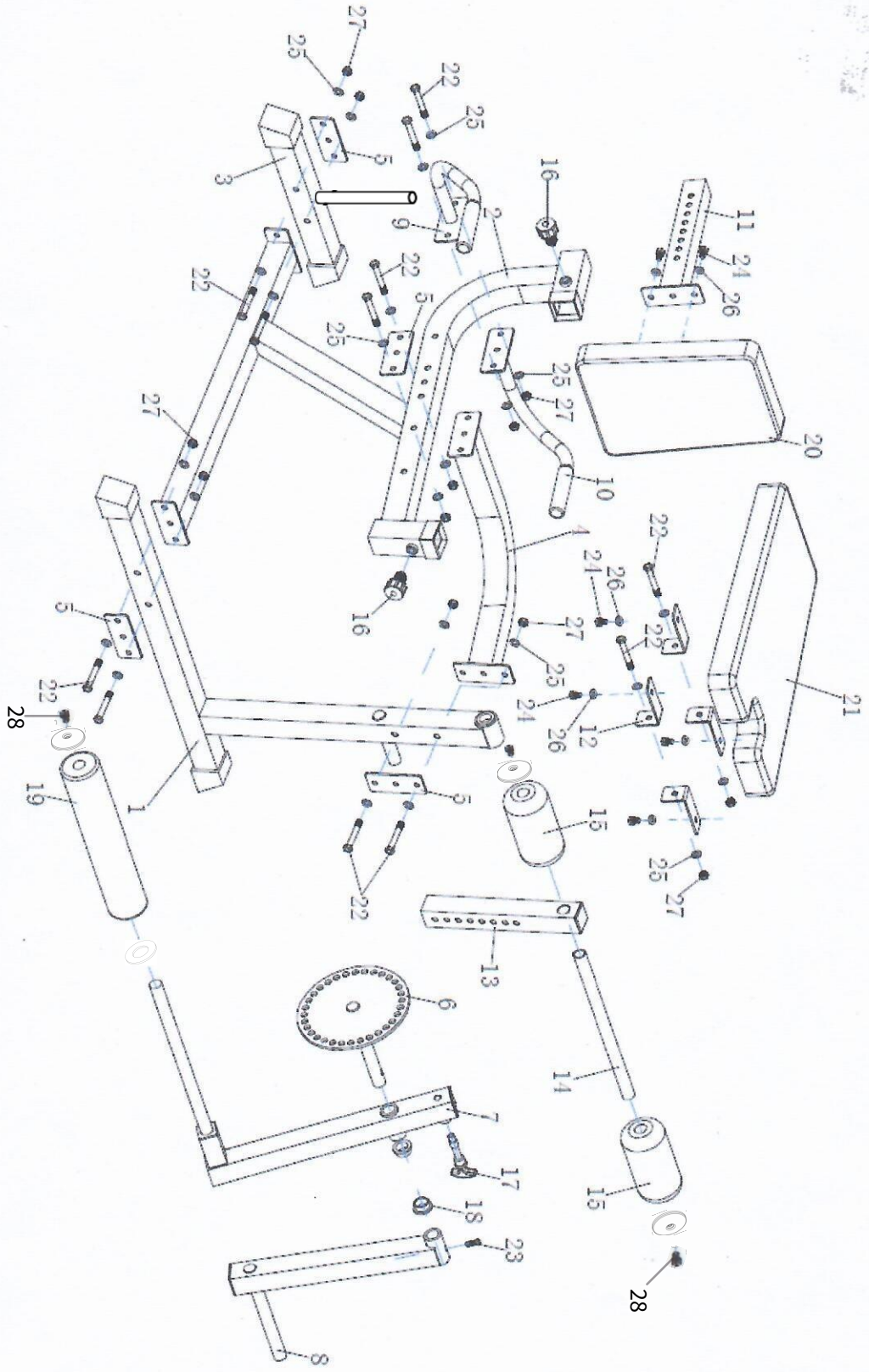

| NO. | Description | Qty |
|---|---|---|
| 1 | Stand Frame | 1 |
| 2 | Main Frame | 1 |
| 3 | Back Base Tube | 1 |
| 4 | Connect Tube | 1 |
| 5 | Support Plate | 4 |
| 6 | Adjustable Plate | 1 |
| 7 | Leg Tube | 1 |
| 8 | Weight Plate Tube | 1 |
| 9 | Left Handle Bar | 1 |
| 10 | Right Handle Bar | 1 |
| 11 | Backrest Tube | 1 |
| 12 | Seat Plate | 4 |
| 13 | Leg Adjustable | 1 |
| 14 | Foam Tube | 1 |
| 15 | Small Foam | 2 |
| 16 | Quick Pin | 2 |
| 17 | Long Pin | 1 |
| 18 | Oil Bushing | 2 |
| 19 | Big Foam | 1 |
| 20 | Backrest | 1 |
| 21 | Seat | 1 |
| 22 | Hex Bolt M10x75 | 12 |
| 23 | Bolt M10x40 | 1 |
| 24 | Hex Bolt M8x20 | 6 |
| 25 | M10 Washer | 24 |
| 26 | M8 Washer | 6 |
| 27 | M10 Nylon Nut | 12 |
| 28 | In Hex Bolt M8x16 | 3 |

## Step 1 – Assembly Instructions.

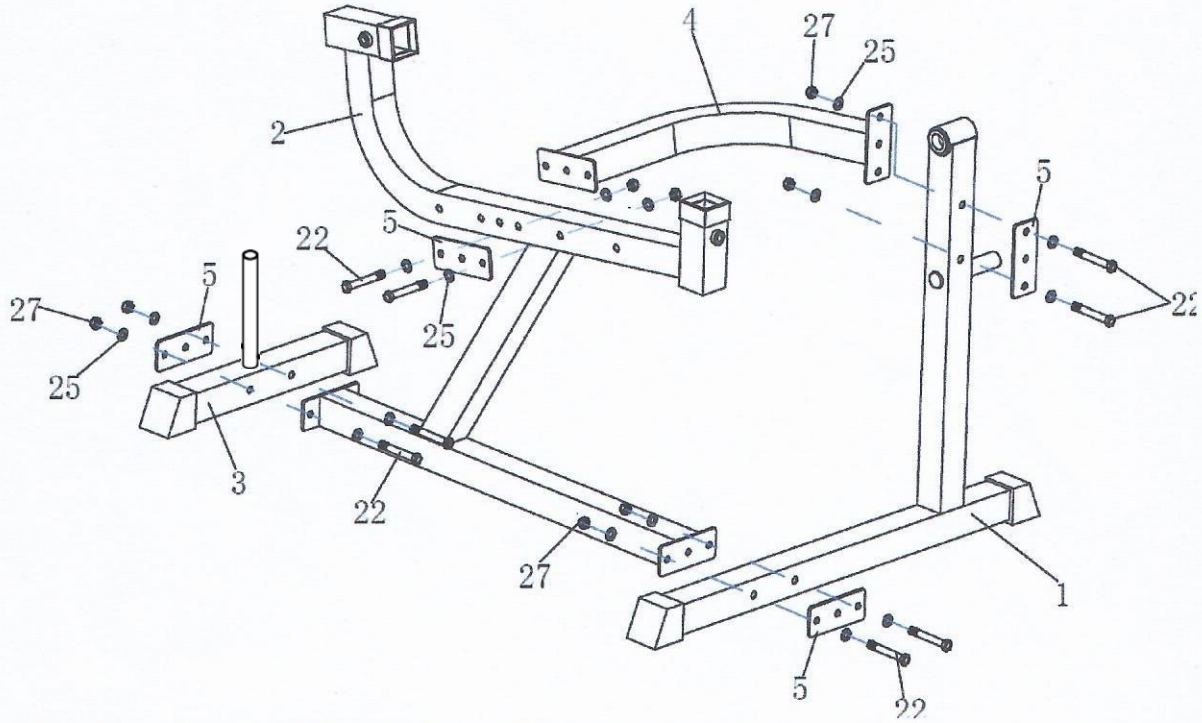


## Step 2 – Assembly Instructions.

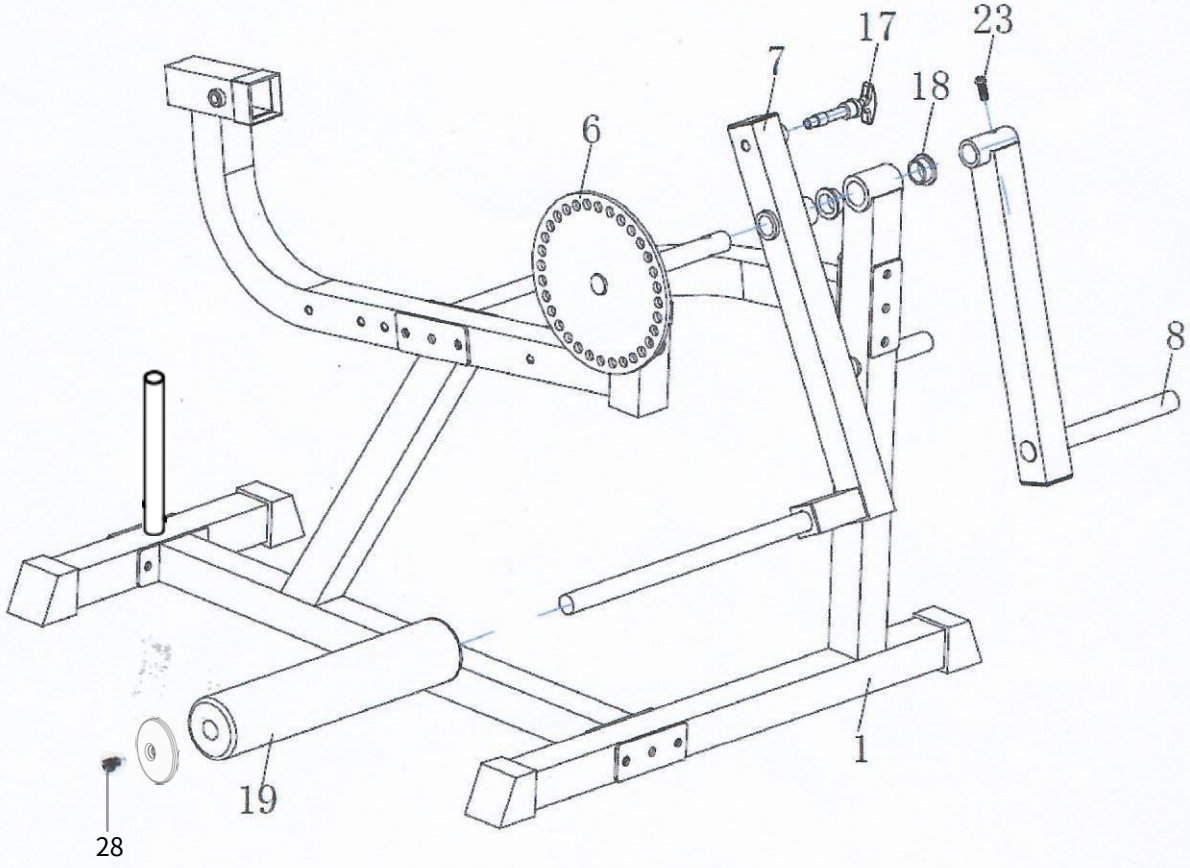

## Step 3 – Assembly Instructions.

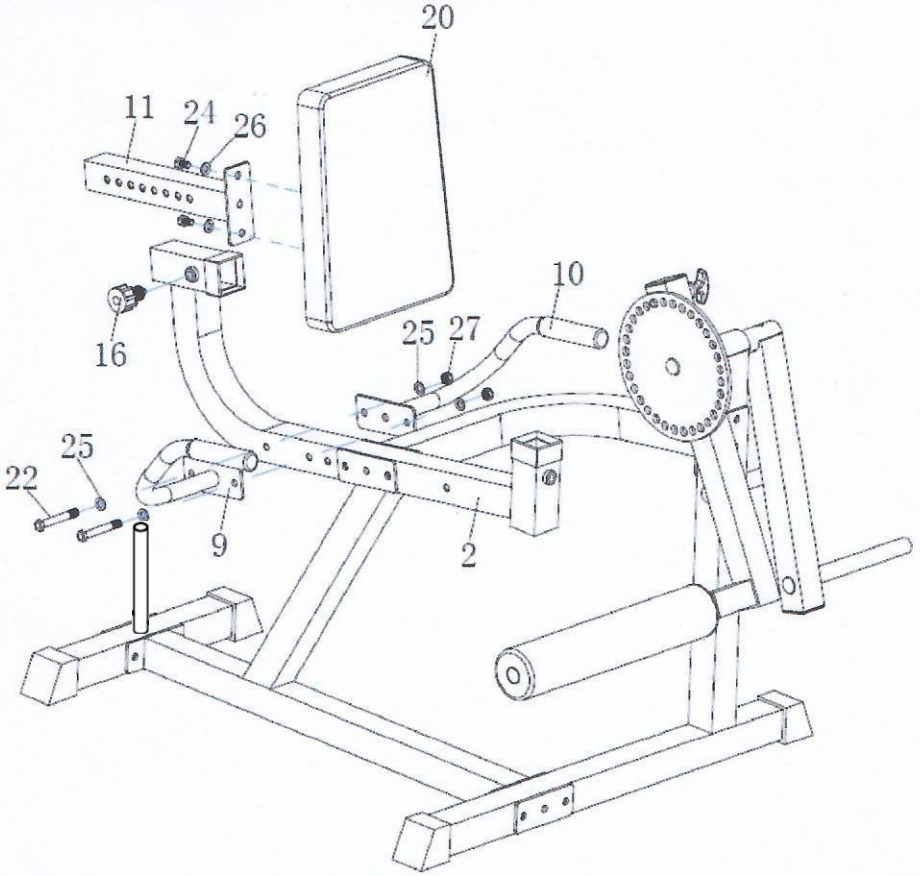


## Step 4 – Assembly Instructions.

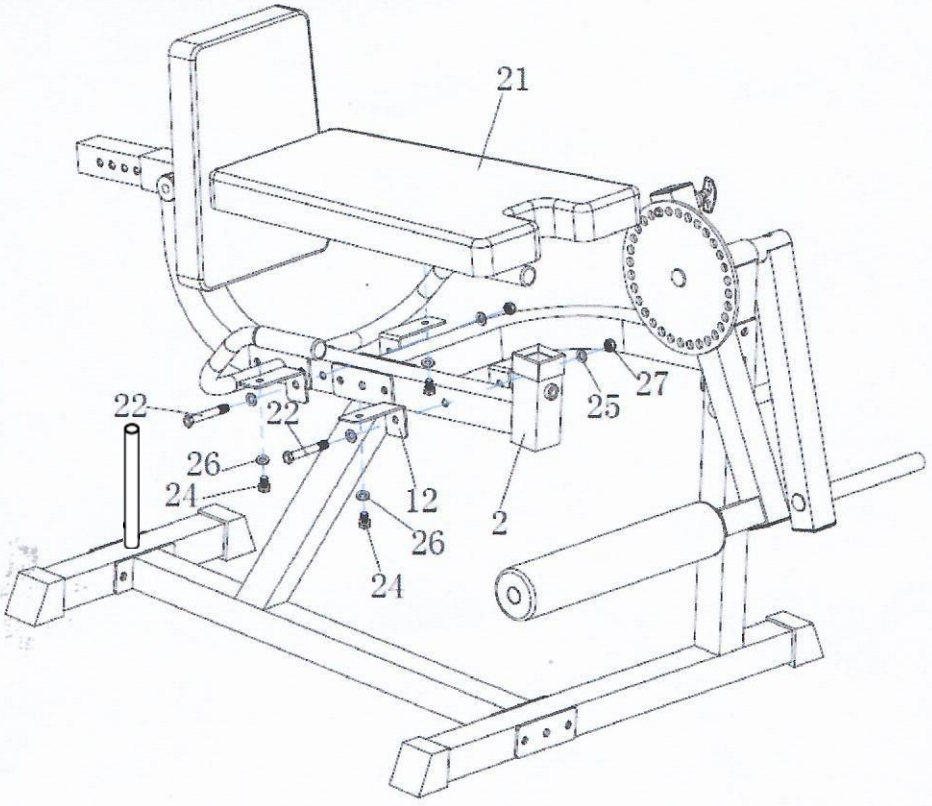

## Step 5 – Assembly Instructions.

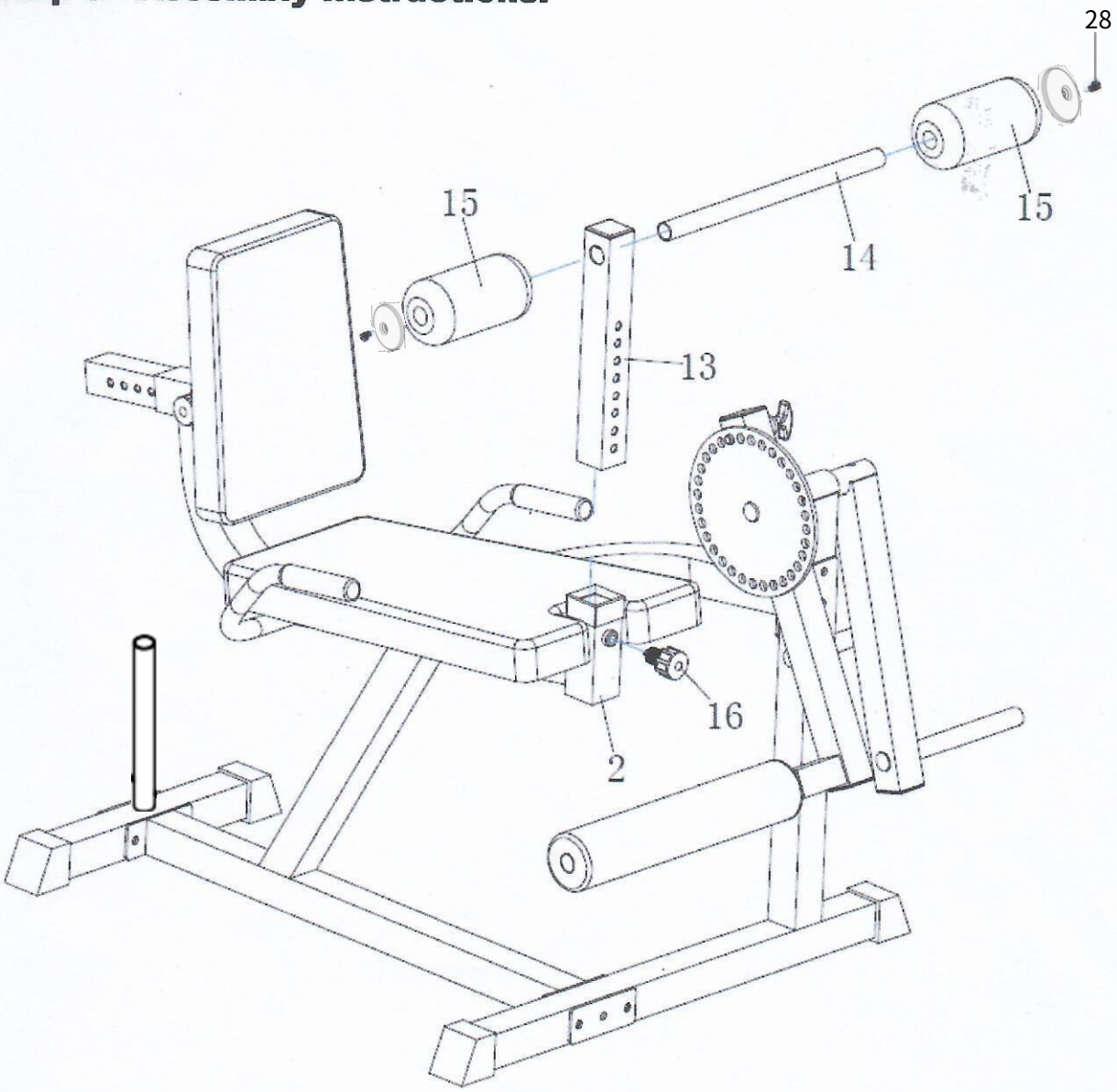

# EXERCISE INSTRUCTIONS

Using your **MULTI GYM** will provide you with several benefits. It will improve your physical fitness, tone your muscles and, in conjunction with a calorie-controlled diet, help you lose weight.

## 1.The Warm Up Phase

This stage helps get the blood flowing around the body and the muscles working properly. It will also reduce the risk of cramp and muscle injury. It is advisable to do a few stretching exercises as shown below. Each stretch should be held for approximately 30 seconds, do not force or jerk your muscles into a stretch - if it hurts, STOP.

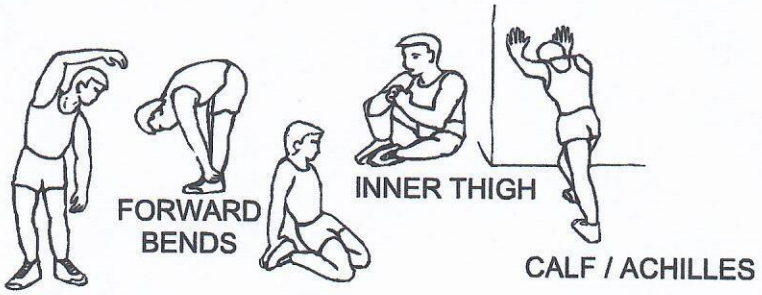


## 2.The Exercise Phase

This is the stage where you put the effort in. After regular use, the muscles in your legs will become more flexible. Work at your own pace and be sure to maintain a steady tempo throughout. The rate of work should be sufficient to raise your heartbeat into the target zone shown on the graph below.

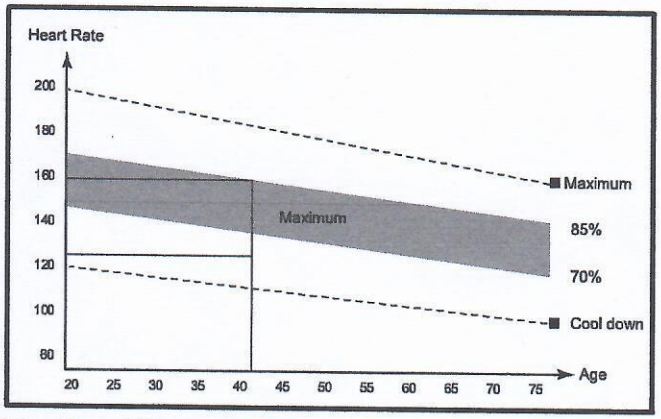


This stage should last for a minimum of 12 minutes though most people start at about 15-20 minutes

## 3. The Cool Down Phase

This stage is to let your Cardio-vascular System and muscles wind down. This is a repeat of the warm up exercise e.g. reduce your tempo, continue for approximately 5 minutes. The stretching exercises should now be repeated, again remembering not to force or jerk your muscles into the stretch.

As you get fitter you may need to train longer and harder. It is advisable to train at least three times a week, and if possible space your workouts evenly throughout the week.

## MUSCLE TONING

To tone muscle while on your **MULTI GYM** you will need to have the resistance set quite high. This will put more strain on your leg muscles and may mean you cannot train for as long as you would like. If you are also trying to improve your fitness you need to alter your training program. You should train as normal during the warm up and cool down phases, but towards the end of the exercise phase you should increase resistance making your legs work harder. You will have to reduce your speed to keep your heart rate in the target zone.