RECOIL

ADJUSTABLE BENCH

Assembly & User Instructions - Please keep for future reference

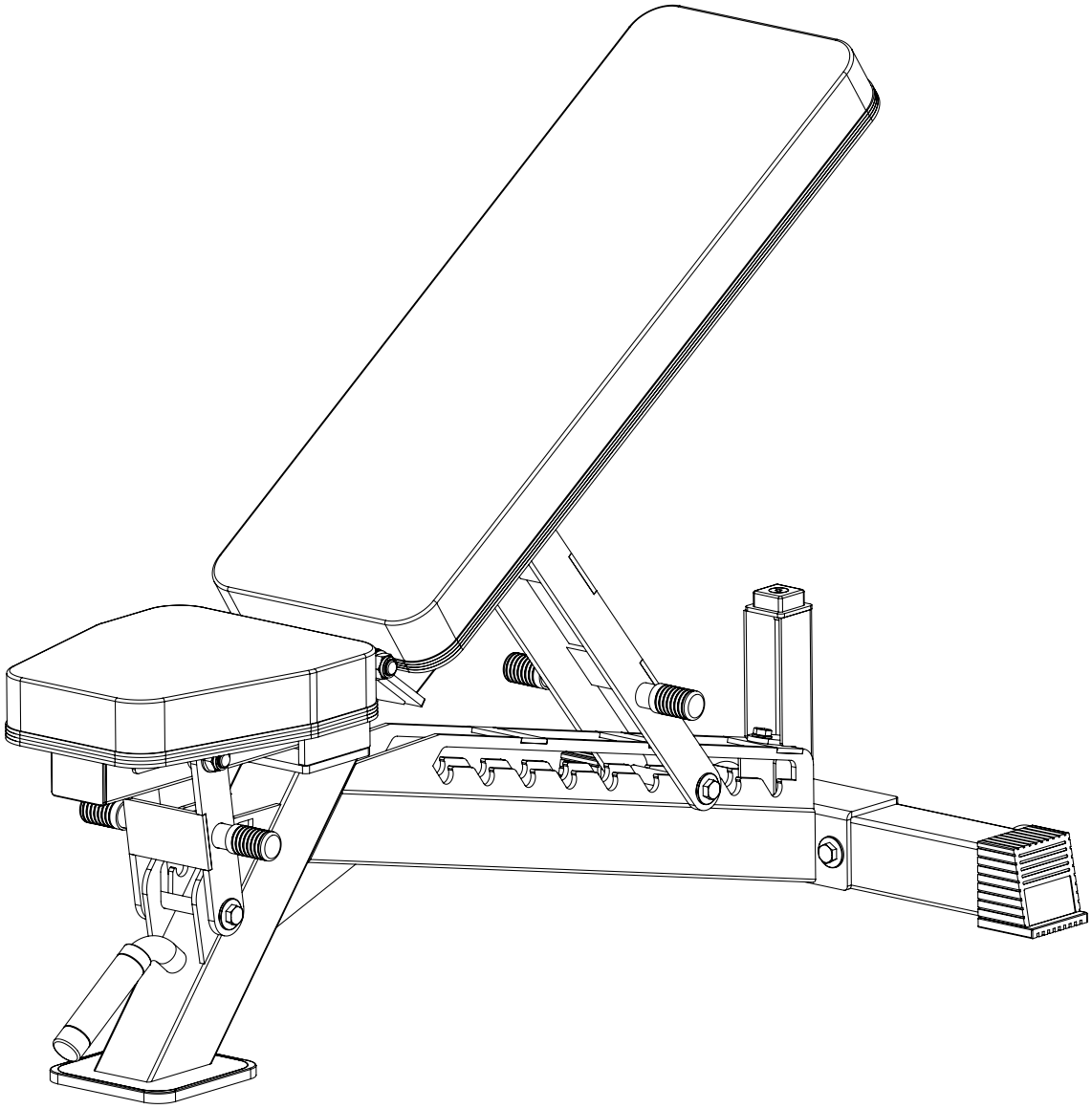

OWNER'S MANUAL

Important – Please read these instructions fully before assembly or use

These instructions contain important information which will help you get the best from your equipment and ensure safe and correct assembly, use and maintenance.

⚠ Safety Information

Important – Please read fully before assembly or using

Please take sufficient time to read the installation instructions before assembling the unit.

Before beginning any exercise program, a general medical examination should be performed by a physician to rule out any health risks.
With improper use of the machine, such as excessive exercise, incorrect settings, etc., damage to health cannot be ruled out.

This machine is intended solely for use by adults and adolescents with appropriate physical and mental development.
Make sure that every user of this machine is sufficiently familiar with all of its functions.
Learn the proper exercise technique before training with heavy weights.

Never allow children to play on this machine or in its immediate vicinity!

Worn or defective parts pose a safety risk and have to be replaced immediately!
If there are defects in the machine it must not be used until it is fully repaired!

Use of this machine is only approved for the purpose it is intended for!
The specified capacity limits must not be exceeded!

When setting up the machine allow for enough freedom of movement for its operation and for exercising.
Special attention should be paid to its moving parts.
If it is fastened to the wall or ceiling, you must make sure there is enough load-bearing capacity at these fixture sites.

The machine must be set up on a horizontal, level, and stable surface!
Any unevenness on the floor must be compensated for.

Place the exercise machine such that no one can hurt his or herself on protruding parts.
Weight plates and bars should be removed from the machine after training, and stowed away in the storage system provided.

Exploded Diagram Parts List

Note: Some of the smaller components may be pre-fitted to larger components. Please check carefully before contacting us regarding any missing components.

Part	Description	O'ty
1	Big washer ∅12	4
2	Lock nut M12	2
3	Hex bolt M12x100	2

Assembly Instructions

UNPACK THE CARTON AND PLACE ALL PARTS ON THE FLOOR. CAREFULLY REMOVE ALL PACKING MATERIAL AND CHECK EACH PART WITH THE MANUAL FIRST. REMEMBER SOME PARTS ARE PRE-FITTED TO LARGER COMPONENTS.

IMPORTANT
ASSEMBLE WITH ALL NUTS AND BOLTS LOOSE AT FIRST, ONLY TIGHTEN AFTER COMPLETING ALL ASSEMBLY STEPS.

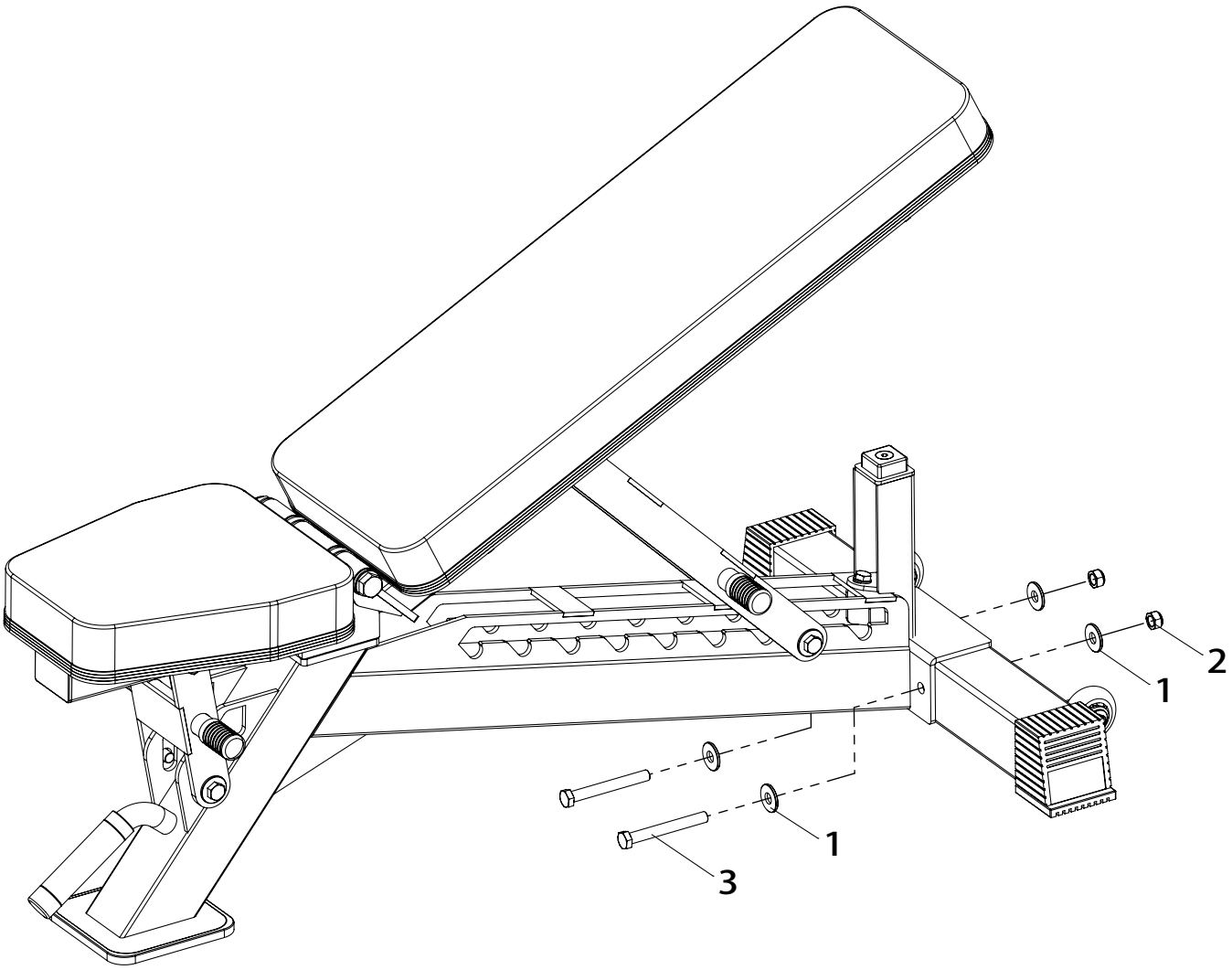

REC1 2373D

STEP 01